Bush-Whacker®

TOUGH ON GRASS, EASY ON YOUR WALLET

2021

PARTS BOOK

HD-121

Welcome

Thank you for selecting the HD-121 Rotary Mower. Your machine has been carefully inspected by both the factory and the dealership prior to being received by you to ensure that it is ready for operation.

This manual explains the proper operation of your machine. It is very important that you read and understand these instructions before operating or maintaining the machine. Failure to do so could result in personal injury or even death to you or passersby. Consult your Bush-Whacker dealership if you do not understand the instructions in this manual or need additional information.

Hall Manufacturing, Inc. reserves the right to make changes at any time without notice or obligation. Additional copies of the manuals are available from your local Bush-Whacker dealer.

Hall Manufacturing, Inc.
3706 E. Washington Ave., P.O. Box Drawer 5638
North Little Rock, AR 72119
(501)945-7550

Table of Contents

Introductory Page ……...……..2

Safety Section ….…….4-13

General Safety Instructions and Warnings…….……...5
- Decals Placement……..……6
- Operations…….7-8
- Attaching/Detaching Cutter……..9
- Rollover…….9-10
- Rotating Blades……10
- Hydraulics…….11

Maintenance...……...12-15
- General Maintenance…….13
- At Least Twice Daily…….13-14
- Daily……...14-15
- Every 1,000 Hours or Annually...……..15

Gearbox Disassembly and Assembly…….16-18

Partsbook……19-49
- Lift Type…….20-35
- Pull Type…….36-48
- Miscellaneous……..49

Warranty Information.....50-51
Warranty Registration Card……...53

Notes……..... 54

Safety Section

General Safety Instructions and Warnings

Attention
Important Safety Information
Read and Study this safety information BEFORE operating this equipment.

The use of common sense and reasonable safety precautions are a must in the operation of this equipment. Think Safety – Accident prevention is dependant upon the personnel involved in the operation, transport, and maintenance of the equipment. To minimize the chance of accidents, serious injury, or even death; Safety Precautions Must Be Followed! **FAILURE TO FOLLOW SAFETY INSTRUCTIONS AND FAILURE TO USE COMMON SENSE COULD RESULT IN SERIOUS INJURY AND/OR DEATH TO THE OPERATOR, BYSTANDERS, PASSERSBY, OR ANIMALS IN THE AREA.**

Safety Decals Information

- Always keep the area around safety decals clean and free of debris so that they can be easily seen and read.
- When installing new components to the equipment, it is necessary to obtain new safety decals from your Bush-Whacker dealer and adhere them promptly and properly.
- Always keep safety decals clean, using soap and water. Do not use abrasive cleaners because they could cause damage to the decals.
- If the safety decals get damaged, or are missing, contact your local Bush-Whacker dealer to order replacements for them.
- In order to replace the safety decals, the equipment must be clean and dry. Then remove the adhesive backing and place it on the equipment.

Decals Part Numbers and Placement

1…...2569

2…..2572

3 4416

4…..CW 4167
5 CCW - 4168

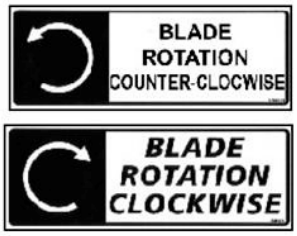

7…..540 Rpm - 4169

8….4415

HD-121

6...6913

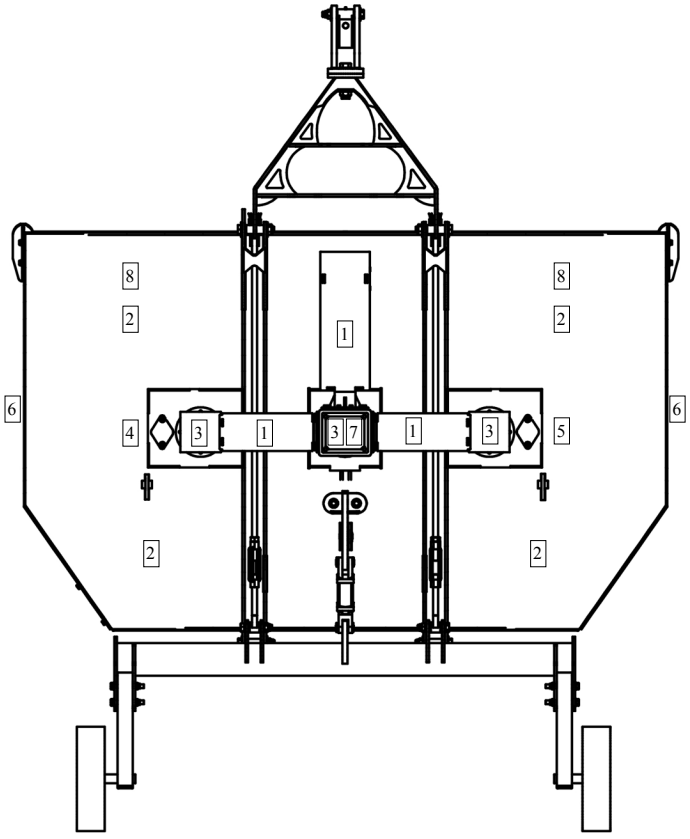

Safety Warnings

Operations

Always make sure that the tractor and mower have the same PTO speed. Check the tractor manufacture's instruction manual for the proper engine RPM to achieve the proper PTO speed. **DO NOT** operate the mower at any higher RPM, doing so will cause damage to the mower as well as create an extreme hazard to the operator, passersby, or animals. Also note that doing so will void the warranty of the machine.

NEVER operate a rotary mower with a person or animal in the area. The blades may throw objects for great distances and can strike a person, passersby, or animal causing serious injury or death.

Stop operation of the machine for a passerby or if someone appears to be approaching the area. Objects can be thrown for hundreds of yards at great speed.

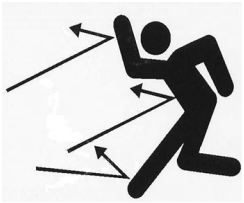

ALWAYS inspect the deflector shields and/or chain guards daily to ensure that they are in proper working order and that no chains are missing. If the deflector shields or chain guards are not operating correctly, chain links are missing, or the complete deflector shields or chain guards assembly is missing, do not operate the mower. **NEVER OPERATE THE MOWER WITHOUT CHAIN GUARDS OR DEFLECTORS IN PROPER WORKING ORDER.**

Rocks, gravel, wire, rope, bricks, or similar objects are potential hazards for rotary mowers operation. These items can cause damage to the machine; but more importantly, they can be ejected from underneath the mower at very high speeds, resulting in property damage, injury or even death. Always inspect the mowing area prior to the operation of any rotary mower. If any of these objects or similar objects are found, remove them immediately before operation.

NEVER operate the mower without the driveline safety shields in place and in proper working order. Operation without safety shields can lead to injury or death.

EXTREMELY IMPORTANT—Make sure all gearbox shields are in place and tightened before operating the mower. If one works loose, stop mowing and tighten immediately. **NEVER OPERATE THE MOWER WITHOUT ALL GEARBOX SHIELDS PROPERLY INSTALLED. OPERATION WITHOUT SAFETY SHIELDS MAY CAUSE SERIOUS INJURY OR DEATH.**

Safety Warnings

Operations

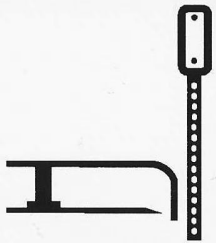

Avoid hitting hard solid objects such as large rocks, concrete culverts, guard rails, etc. This could cause serious damage to the machine. Broken machine parts or pieces of the object can be thrown at very high speeds. This could result in serious injury or death to persons at a considerable distance from the rotary mower.

NEVER ALLOW ANYONE TO RIDE ON THE MOWER OR THE TRACTOR. This equipment, if not operated properly, could be potentially dangerous; therefore, **NEVER ALLOW A CHILD TO OPERATE A ROTARY MOWER.**

Thoroughly examine the rotary mower each day before operating. Tighten loose bolts, nuts, and hydraulic fittings. Replace all damaged or broken parts, including hydraulic hoses. If rotary mowers are not kept in proper working order, they could be damaged and this could result in serious injury.

NEVER engage in repair work under the mower deck or any other part of the mower that is raised off the ground until the mower is safely and securely supported in the raised position. Inadequate support can result in the mower falling, which could result in serious injury or death.

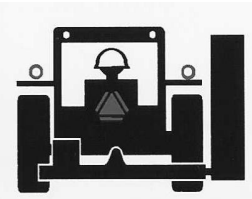

Use **proper signage** around working area. This will help the operator have a safe place to work, and help passers by to take appropriate precautions.

Use the proper **reflective devices** on the equipment to help prevent accidents.

Make sure that all rules of the road are followed, and Slow Moving Vehicle (SMV) rules are also observed

Always inspect the area before mowing for potential mower hazards. Remove or avoid all foreign objects such as wire, cable, metal objects, and all other foreign material. **Failure to do so could result in serious injury to the operator or passerby from foreign material being thrown from the mower**.

Safety Warnings

Attaching/Detaching Cutter

If operating along roadway, keep equipment within the **lane closest to the work area**. Never operate equipment against the flow of traffic, which could possibly result in a head-on collision causing serious injury or death.

Never use equipment around railroad tracks without direct railway supervision. Inexperience in railway operations may cause loss of communications, loss of signals, rail and tie damage or derailment.

NEVER cross railway tracks anywhere other than at normal traffic crossings. Unauthorized machinery on railways are in extreme danger of being struck by locomotives and railway machinery resulting in damaged equipment, serious injury or death.

Before approaching any rotary mower or before dismounting the tractor, always make sure of the following:

The tractor transmission is in the parking gear, and the parking brake is set to keep the tractor from moving while unattended.

The tractor PTO is disengaged.

The engine has stopped, the key is out of the ignition, and all moving parts (both tractor and mower) have completely stopped. The rotating parts of the tractor and rotary may mower continue to rotate after the PTO has been disengaged. **THE OPERATOR SHOULD REMAIN SEATED UNTIL ALL MOVEMENT HAS CEASED!**

NEVER WORK ON THE ROTARY MOWER WITH THE POWER ON.

Rollover

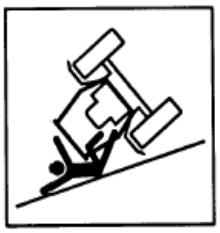

Care must be taken when operating on uneven terrain, ditches, or embankments. The chances of the tractor and/or mower rolling over are increased. Also, the chance of objects being thrown by the blade are increased when operating under these adverse conditions.

Safety Warnings

Rollover

Never operate the equipment without the **Roll-Over Protective Structure (ROPS) and without a seat belt.** These items prevent injury in a roll-over accident. It is also highly recommended to wear protective equipment such as a hard hat, safety glasses, safety shoes, and ear plugs.

OPERATE CAREFULLY! It is important to slow down when turning and when going down slopes. Doing so could result in a roll over and injury, or possibly death, to the operator.

Rotating Blades

Stay away from rotating blades. **Keep hands and feet clear of rotating blades and discharge areas at all times**. Never get close to the blades until **all motion has stopped and machine is turned off.**

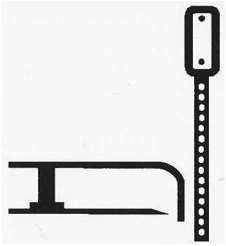

Never allow **rotating blades** to **contact solid objects** like rocks, posts, curbs or guard rails. **Only operate if all guards and deflectors are in place and in good working condition**.

Never operate equipment with loose blades. Retighten after the first 8 hours of use and after blade replacement.

- Never operate with mower deck raised if bystanders or traffic are in the area. This helps to prevent injury or death from objects thrown by the blades.
- Stop cutting if someone comes within 300 feet. **DO NOT operate equipment with bystanders in the area!** Rotary mowers have the ability to throw debris considerable distances when blades are allowed to strike foreign objects. Operator must exercise caution or serious injury or even death could result.

Safety Warnings

Hydraulics

Relieve all pressure in the hydraulic lines by setting the mower deck on the ground, shutting the tractor off, and actuating lift valve handles before disconnecting hoses. This relief of pressure will reduce possibility of serious injury from spewing hydraulic fluid.

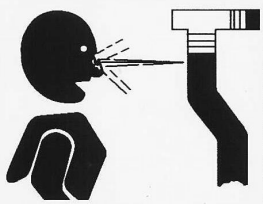

Frayed, torn, or crimped hoses may rupture and spray boiling oil onto Operator and cause serious bodily injury from scalding.

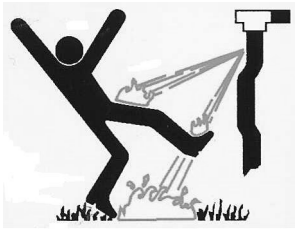

Failure to inspect and repair or replace hoses may cause worn hoses to **rupture suddenly** and **violently** resulting in **serious bodily injury** from **scalding or fire** with resulting burn injury or death.

Boiling oil may spray onto hot tractor parts and **catch fire** causing severe burn injury or death.

Inspect hoses daily and repair or replace when needed. Stop all leaks. Repair or replace hoses as indicated to prevent unexpected failure and possible serious injury to operator or bystander.

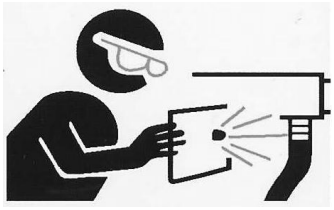

Use paper or cardboard to check for leaks. Never use your hand. If **oil penetrates skin**, gangrene or other serious injury could occur. **If skin is penetrated by hydraulic fluid, get immediate medical attention**.

Safety Conclusion

Now that the operator has read the information provided in this manual; he or she should now be aware of how dangerous a rotary mower can be if operated improperly. It is important that the operator of this equipment should be cautious, conscientious, and use common sense when operating this equipment in order to avoid serious injury and or death to the operator, support personnel, passersby, or animals.

Safety
Depends on You!

General Maintenance Tips

General Maintenance

Refer to tractor's service manual for proper tractor maintenance.

NEVER service the mower with the power on, except where otherwise stated.

Before working on a mower always check to see that:

- The tractor's transmission is in the parking gear and the parking brake is set to keep the tractor from moving while unattended.
- The tractor PTO has been disengaged.
- The engine is off and all moving parts (both tractor and mower) have completely stopped.

The rotating parts of the tractor and mower continue to rotate after the PTO has been disengaged. The operator should remain seated until all movement has ceased.

Never engage in repair or service work under the mower deck or any other part of the mower that is raised off of the ground until the mower is safely and securely supported in the raised position.

Use extreme caution when working on a mower. Many of the parts are heavy and sharp and can cause serious injury if they are dropped or fall on the operator or bystander.

The blades are very sharp and can pivot. Use extreme caution when performing maintenance on them. Failure to do so could result in serious injury or possibly even death.

Use marfac double ought grease or cotton picker spindle grease to lubricate all Bush-Whacker gearboxes. Replacement gearbox grease is available from you Bush-Whacker Dealership.

Always use genuine Bush-Whacker replacement parts, available through the network of authorized dealers. The use of non-OEM parts will void the warranty of this machine. Non-OEM parts, specifically blades and blade bolts, may not meet Hall Manufacturing Inc. specifications and could lead to serious injury or death.

At Least Twice Daily

<u>Rotor Bar Assembly, Blades, Blade Bolts, and Nuts</u>

- Check blades for any signs of cracking or damaged cutting surfaces. If a blade is cracked, replace the set at once. DO NOT operate the mower at any time with a cracked or severely damaged blade! If a blade breaks, it could cause severe injury or possibly death.
- Check if blade cutting surfaces are dull. If they are, re-sharpen or replace blades.
- Check if blade bolts and nuts are loose, cracked or damaged. DO NOT operate the mower with any of those characteristics. Any of these conditions could allow the blade to come loose and could cause injury or possibly death. Always keep the blade bolts and nuts tightened to 350 ft. lbs. of torque.
- DO NOT operate the mower with just one blade.

At Least Twice Daily

Rotor Bar Assembly, Blades, Blade Bolts, and Nuts

- Make sure rotor bar assembly is securely attached with castle nut and cotter pin to the output shaft.

- Always make sure to replace the blades in sets.

NOTE: When mowing at low cutting heights or on uneven terrain, the blades can come in contact with the ground frequently. When this happens, the blade tips can be pushed upwards causing the blade to bend. By pushing upwards on the blade tip, the rear of the blade (at the bolt hole) is forced downward away from the rotor bar assembly. This causes the bolt to be pulled through the bar and can cause it to shear. When the bolt shears, it will throw a blade. When operating in these conditions, the operator must check the blade bolts more frequently than normal, at least four times a day.

Always use genuine Bush-Whacker replacement blades, bolts, and nuts. Other blades may not meet Hall Manufacturing specifications and could lead to serious injury or death.

Hydraulics

- If at any time the hoses become frayed, worn, or pinched, replace them.

Daily

Shields

- Make sure ALL shields are in place and tightened before operating the mower. If one works loose, stop mowing and tighten immediately.
- Replace shields if there's any damage or excessive wear.

Drive Shafts

- Inspect the Drive Shaft Shields, make sure that they are installed and working properly. If shields become damaged or loose during operation, stop immediately and fix or replace them.
- Make sure the drive shaft shield mounting chains are securely fastened.
- Inspect cross kits
- Grease each zerk fitting with natural or synthetic lubricants. Never mix the two types of lubricants.
- Check Drive Shaft tubes to ensure that they telescope properly. If they do not, replace them.

Daily

Gearboxes

- Check gear lube. If the grease is lower than the inspection plug on the rear side of the gearbox, then fill to the level of the plug. NOTE: Do not overfill the gearbox. If the grease level of the gearbox is low, additional grease can be purchased from your Bush-Whacker dealer.
- Inspect output shaft for vines, wire, rope, etc. that may collect around the shaft and tear up the output seal. If a seal is leaking, replace it, or risk overheating and severe damage to the equipment.
- Check the mounting bolts and nuts to be sure that they are correctly secured. If left unchecked, it could cause excessive vibrating which could damage the equipment.

Pins, Bolts, and Nuts

- Inspect all pins, bolts, and nuts, making sure that they are all in place and secure. Look for loose fasteners and tighten to the proper torque, as required.
- Make sure the three point hitch mount and stabilizer pins are secure, and Top Links are not loose or slack.

Skid Shoes

- Check for any wear or damage, replace if required.

Frame

- Look for any structural cracks, damage and wear.
- Keep the equipment clean. Inspect for debris caught in the machine, especially at all pinch points.

Wheel Hubs

- Grease wheel hubs at zerk fitting once a day before operating the mower. Check seals for leakage. Replace seals if a leak is detected. Also, check bearings for damage. If they have seized, they are damaged; replace them immediately before use.

Chain Guards

- Rear and front chain guards and front metal deflectors are standard equipment for all Bush-Whacker rotary mowers.
- Always inspect the chain guards and deflectors to be sure no chain links are missing and the guards are operating correctly. If the guards are not operating correctly, links are missing, or the complete chain guard assembly is missing, do not operate the mower. **Never operate the mower without chain guards in proper working order.**

Every 1,000 Hours or Annually

It is recommended to do annual, pre-season maintenance at the end of each operating season, rather than at the beginning.

The mower should be stored in the off-season **cleaned, inspected and repaired**. This will prevent any rust forming on the mower's surfaces and contaminants damaging the hydraulic components.

Gearbox Disassembly and Assembly Procedures

Gearbox Disassembly Procedure

1. Remove 3/8” bolts from input cap. Remove the input cap taking care not to damage the seal in the cap.
2. The input shaft assembly can now be removed. To disassemble the input shaft assembly it is not necessary to remove the retaining ring. The bearing will press off of the ends of the shaft and the gear will slide off.
3. The output gear will slide off of the output shaft.
4. Remove the 1/2” bolts from the output cap and remove the output cap; once again take care not to damage the seal.
5. The output shaft assembly will have to be pressed out from the inside or it can be pulled out. The bearings will need to be pressed off.
6. If any of the bearing races either in the housing or in the input cap need to be removed, a blind hole bearing puller should be used.

Gearbox Assembly Procedure

1. The output assembly goes into the housing first. If the upper bearing race has been pulled out it must be pressed in. After the bearings are pressed onto the output shaft, the shaft can be inserted into the housing.

2. The lower bearing race will have to be pressed into the housing until it is flush with the bottom surface of the housing. Using the same number and thickness of gaskets replace the output cap. The 1/2" bolts are torqued to 60 foot pounds.

3. The bearing preload is measured by rolling torque. The rolling torque should be between 6-15 inch pounds. If the rolling torque is too high the output cap will need to be removed and an additional gasket added. When a gasket is added the lower race will need to be pulled out slightly. If the rolling torque is too low or there is any movement of the output shaft, a gasket will need to be removed.

4. Once the preload is set, remove the output cap. Install the seal into the cap and apply sealant to the gaskets. Replace the output cap, making sure the torque is correct.

5. Slide the output gear onto the output shaft in the housing.

6. The bearing race for the rear bearing on the input shaft must be pressed in.

7. Slide the input gear onto the shaft to the retaining ring. Then place the spacer above the gear. Press the bearing on the front of the input shaft. Lastly, press the bearing onto the rear of the shaft.

8. Place the input shaft assembly in the housing and check the gear mesh and black lash. The gear mesh is correct when the back surface of the gear teeth are level. The back lash should be between 0.006" and 0.014" when measured at the pitch diameter of the gear set. If the gear mesh or back lash are incorrect use shims to correct.

9. Press the bearing race into the input cap. Using the same number and thickness of gaskets, place the input cap on the housing. Torque the 3/8" bolts to 25 foot pounds.

10. The bearing preload is measured in the same manner as for the output shaft. The rolling torque should be between 11-25 inch pounds. Refer to step 3 for correction of the preload.

11. Once the preload is set, remove the input cap. Install the seal into the input cap and apply a sealant to the gaskets. Replace the input cap taking care not to damage the seal. Check the position of the oil plugs on the input cap. The oil level check plug should be just below and to the right of the input shaft, with the fill plug directly under the input shaft. Torque the bolts back to 25 foot pounds.

12. Fill the gear box with the recommended lubricant in an upright position similar to the mounting position. Fill the gearbox to the level plug (1/8" pipe plug). Check the lubricant with a dipstick (a small piece of wood works well as a dipstick).

Partsbook

HD-121 Lift Type
Assembly Breakdown

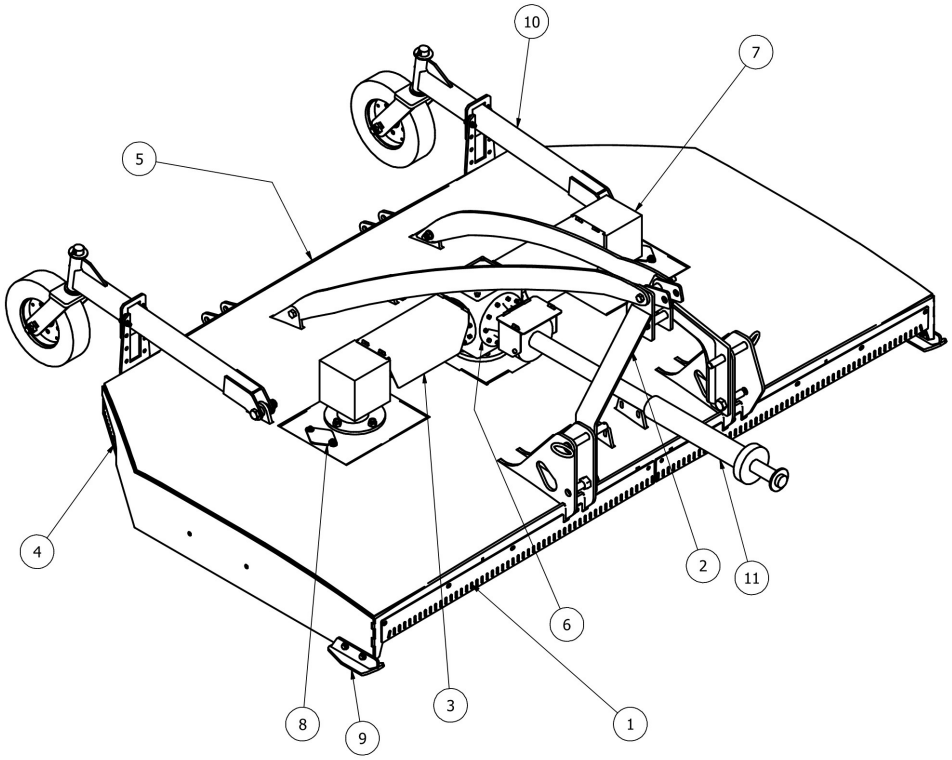

Ref. No.	Description	Page Number
1	Front Chain Guard Half	36,37
2	Hitch Frame Assembly	21
3	Gear Box Shield Assembly	34,35
4	Rear Side Chain Guard	36,37
5	Rear Chain Guard Half	36,37
6	Divider Box	24-25
7	Gear Boxes	22-23
8	Access Cover Plate	
9	Skid Shoes	33
10	Axle Arm Assembly	32
11	Drive Shaft	26,27
12	Side Drive Shaft	28
13	Rotor Bar Assembly (NOT SHOWN)	29

Hitch Frame Assembly

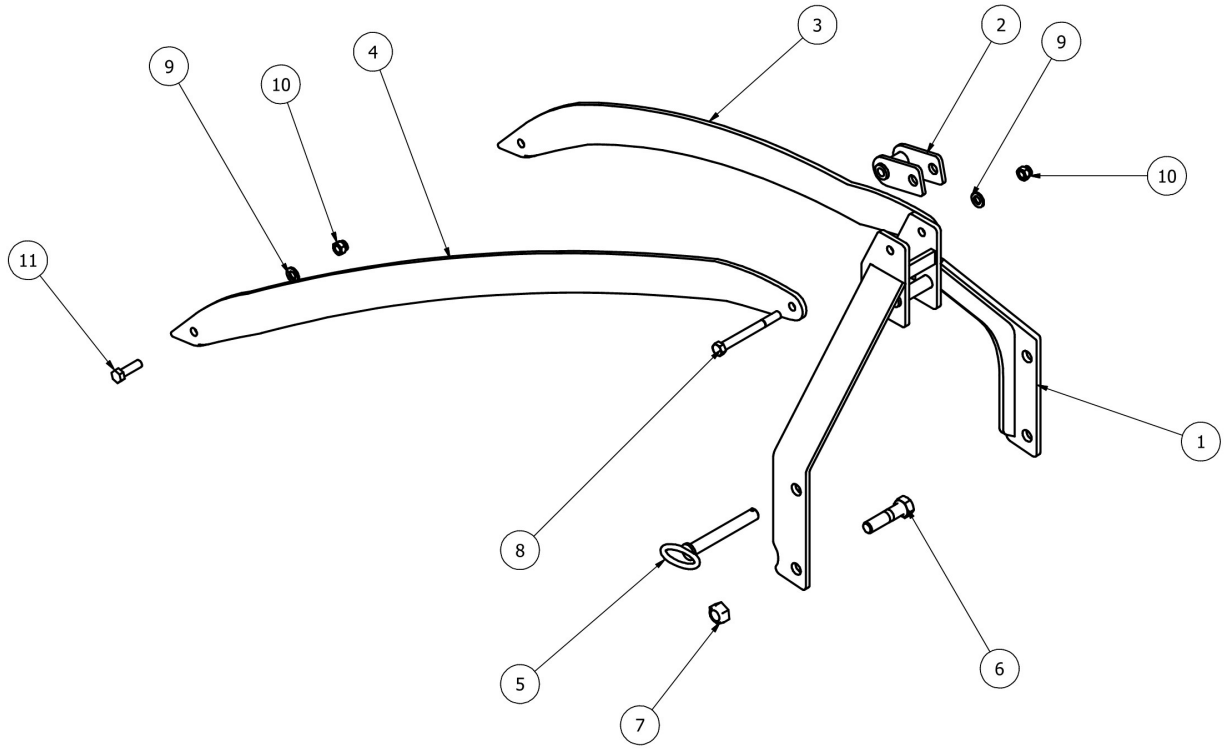

Ref. No.	Part No.	Description	Qty
1	6784	Hitch Frame	1
2	4860	Cat. II Clevis	1
3	6785L	Left Brace	1
4	6785R	Right Brace	1
5	3715	Hitch Pin	2
6	3373	Hex Bolt	2
7	6878	Nut	2
8	3284	Hex Bolt	1
9	3285	Washer	3
10	2077	Nut	3
11	6600	Hex Bolt	2

6914 Gear Box
(See Maintenance Section for Required Lubricant)

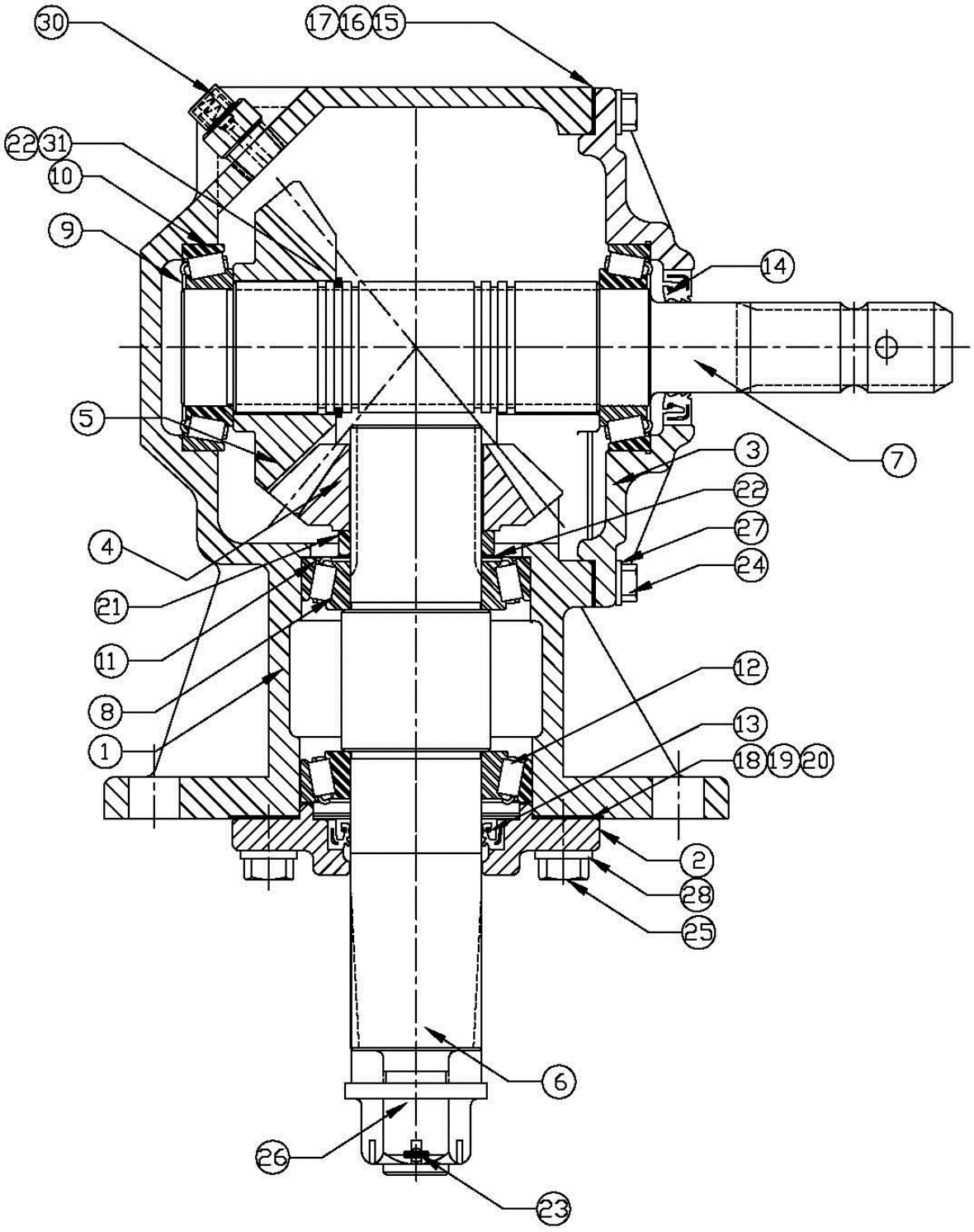

6914 Gear Box
(See Maintenance Section for Required Lubricant)

Ref. No.	Part No.	Description	Qty.
1	5750	HOUSING	1
2	2732	CAP—OUTPUT	1
3	2726	CAP—INPUT	1
4	2014	PINION—13 T, OUTPUT	1
5	2019	GEAR—19 T, INPUT	1
6	2011	SHAFT—OUTPUT	1
7	6927	SHAFT—INPUT, 1-3/4” - 20	1
8	2711	BEARING CONE	2
9	1422	BEARING CONE	2
10	2717	BEARING CUP	2
11	2712	BEARING CUP	1
12	2729	BEARING CUP	1
13	5708	SEAL	1
14	5870	SEAL	1
15	5871	GASKET INPUT CAP—0.30	VAR
16	5872	GASKET INPUT CAP –0.15	VAR
17	5707	GASKET INPUT CAP –0.10	VAR
18	2731	GASKET OUTPUT CAP—0.30	VAR
19	1410B	GASKET OUTPUT CAP—0.15	VAR
20	2730	GASKET OUTPUT CAP—0.10	VAR
21	5873	SPACER	1
22	3231	SHIM 0.25	VAR
23	5706	COTTER PIN	1
24	4963	HEX HD. SCREW	8
25	4256	HEX HD. SCREW	4
26	1420	HEX SLOTTED NUT	1
27	5446	LOCK WASHER	8
28	2733	LOCK WASHER	4
29	2742	PIPE PLUG—SQ. HD.	1
30	5246	PLUG—PRESSURE RELIEF	1
31	2719	RETAINIG RING	1

3722 Transfer Box

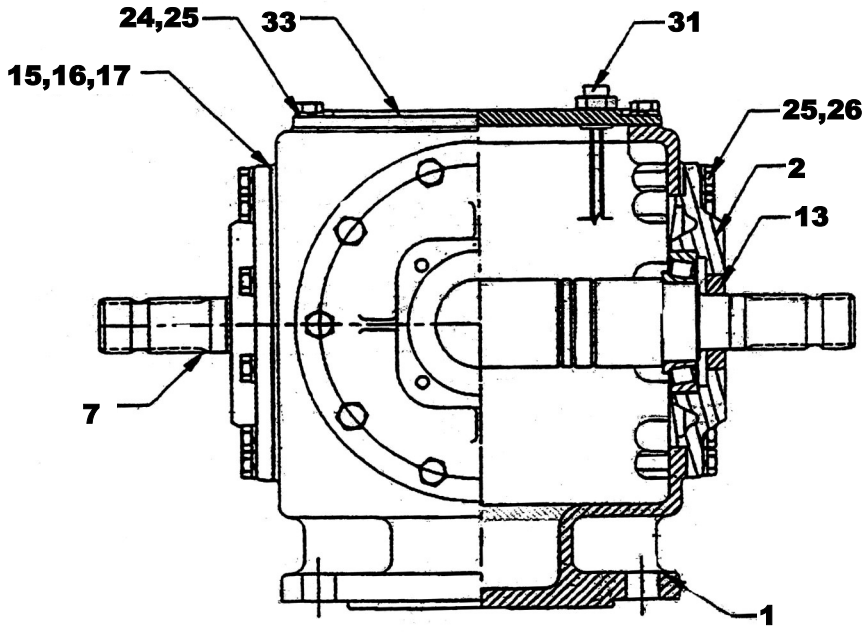

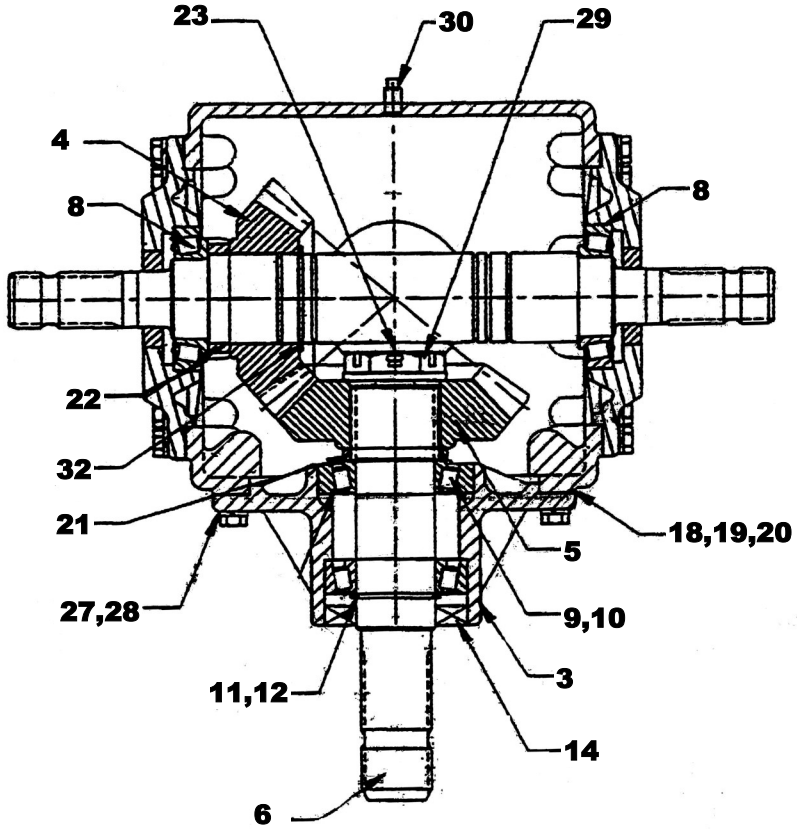

3722 Transfer Box
(See Maintenance Section for Required Lubricant)
Parts List

Ref. No.	Part No.	Description	Qty
1	3723	Housing	1
2	3726	Side Cap	2
3	7155	Input Cap	1
4	3729	Gear	1
5	3728	Gear	1
6	7156	Input Shaft	1
7	3731	Side Shaft	1
8	1615	Bearing Cup and Cone	2
9	7157	Bearing Cup	1
10	7158	Bearing Cone	1
11	6295	Bearing Cup	1
12	6296	Bearing Cone	1
13	2713	Output Seal	2
14	7159	Input Seal	1
15	3734	Shim	AR
16	3735	Shim	AR
17	3736	Shim	AR
18	3737	Shim	AR
19	3738	Shim	AR
20	3739	Shim	AR
21	3740	Spacer	1
22	3752	Spacer	1
23	3741	Cotter Pin	1
24	3742	Bolt	8
25	5446	Washer	28
26	2728	Bolt	20
27	3743	Bolt	10
28	3744	Washer	10
29	3745	Nut	1
30	2742	Pipe Plug	1
31	3746	Vent Plug	1
32	7160	Retaining Ring	1
33	3749	Cover	1

4028 Main Drive Shaft for Lift Type

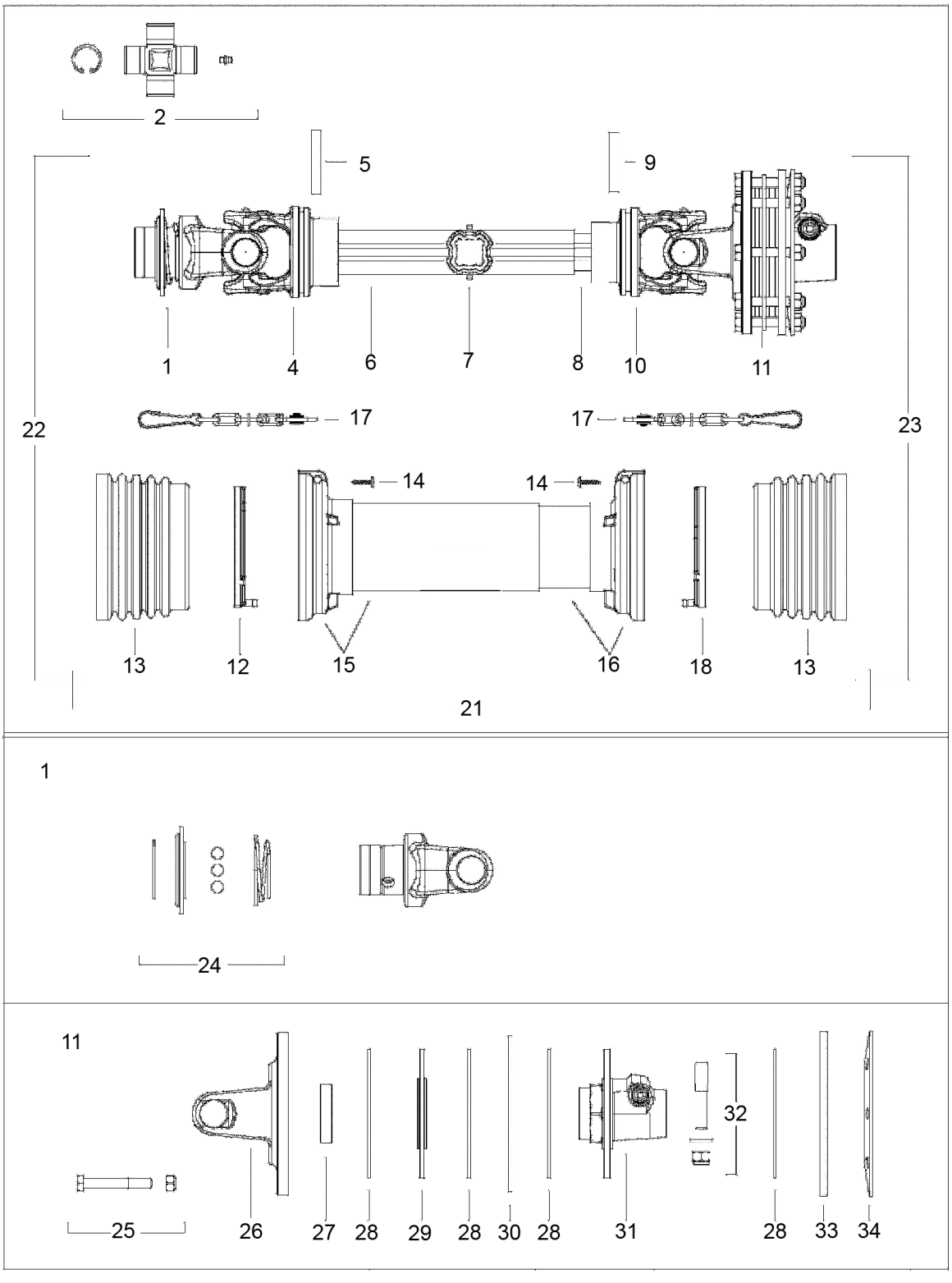

4028 Main Drive Shaft for Lift Type
Parts List

Ref. No.	Part No.	Description	Qty
1	5093	Quick Disconnect Yoke	1
2	3957	Cross Kit	2
3	3917	Grease Fitting	1
4	3942	Outer Tube Yoke	1
5	5094	Outer Roll Pin	1
6	5083	Outer Tube (Steel)	1
7	4937	Grease Fitting	1
8	5084	Inner Tube (Steel)	1
9	5095	Inner Roll Pin	1
10	3945	Inner Tube Yoke	1
11	5096	Complete Clutch Assembly	1
12	3927	Outer Shield Ring	1
13	5085	Shield Bell	2
14	3928	Shield Screw	6
15	5086	Outer Shield Tube	1
16	5087	Inner Shield Tube	1
17	5088	Shield Safety Chain	2
18	3932	Inner Shield Ring	1
21	5089	Complete Shield Assembly	1
22	5091	Outer Half Shaft Complete	1
23	5092	Inner Half Shaft Complete	1
24	3940	Slide Collar Kit	1
25	4098	Bolt with Nut	8
26	4018	Flange Yoke	1
27	3962	Bushing	1
28	3963	Clutch Disk	4
29	3964	Clutch Plate	1
30	3965	Inner Plate	1
31	3966	Splined Hub	1
32	3967	Bolt with Nut	1
33	3968	Outer Plate	1
34	5090	Spring	1

Side Coupler Shaft

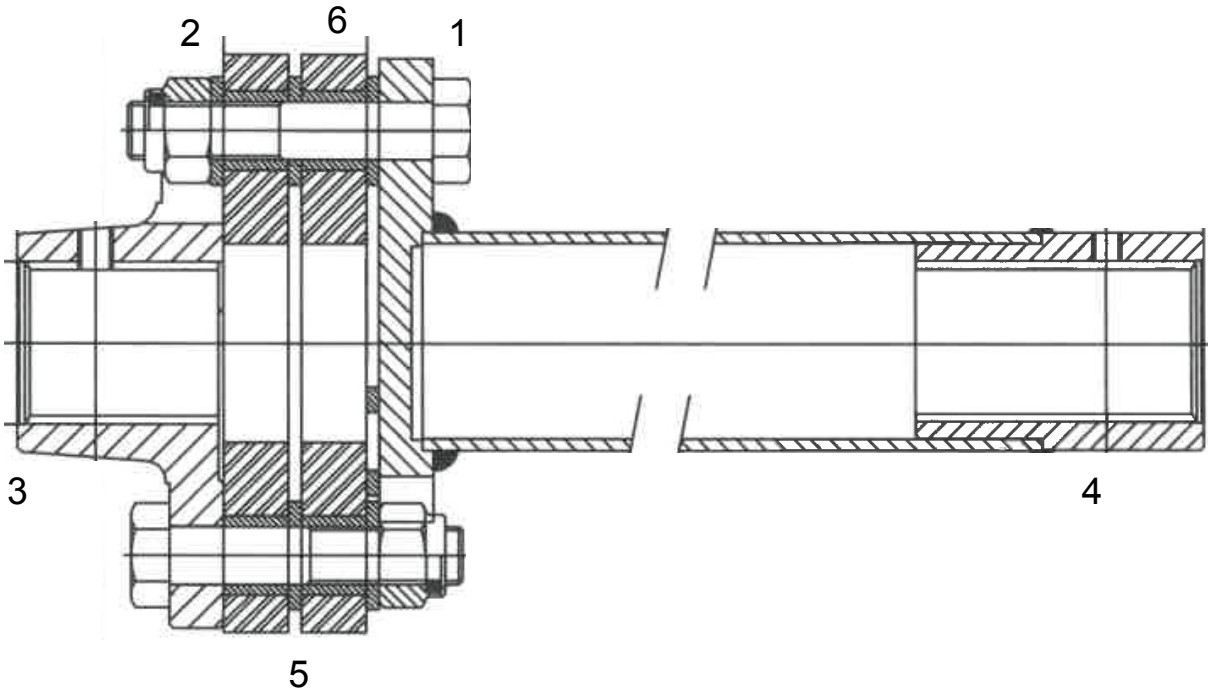

Ref. No.	Part No.	Description	Qty
1	6896	Nut & Bolt Combo	6
2	6897	Flat Washer	12
3	6928	Short Spider	1
4	6929	Long Spider	1
5	6899	Bushing	12
6	6900	Rubber Disc	2

Rotor Bar Assembly

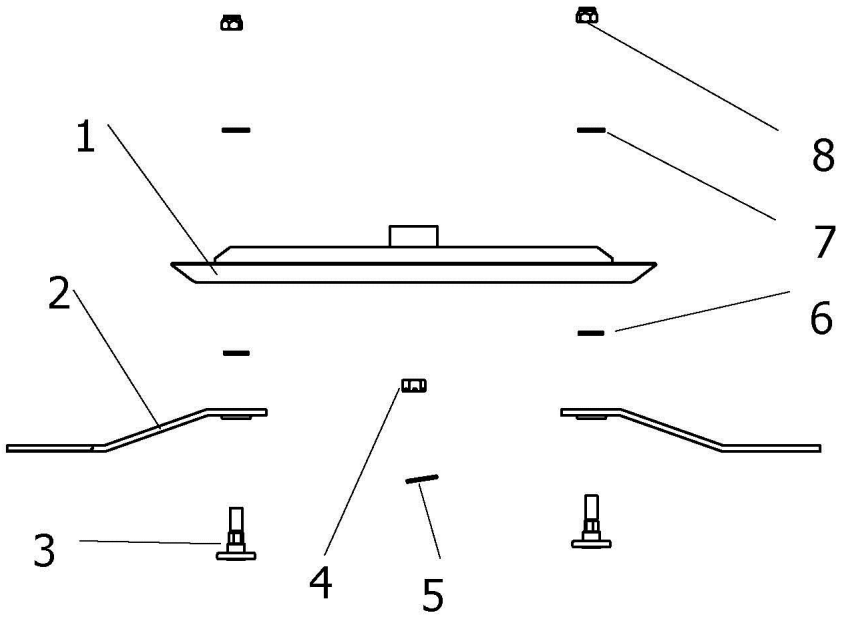

Ref. No.	Part No.	Description	Qty	Remarks
1		Blade Bar W/Stump Jumper 19" CTC Assembly	1	
2	3093	Updraft Blade CCW		Right Side Assembly
2 A	3094	Updraft Blade CW	2	Left Side Assembly
3	3095	Bolt	2	
4	1420	Output Shaft Nut	1	
5	5706	Cotter Pin	1	
6	3096	Washer	2	
7	2106	Washer	2	
8	2105	Nut	2	

Axle Arm Assembly for Lift Type

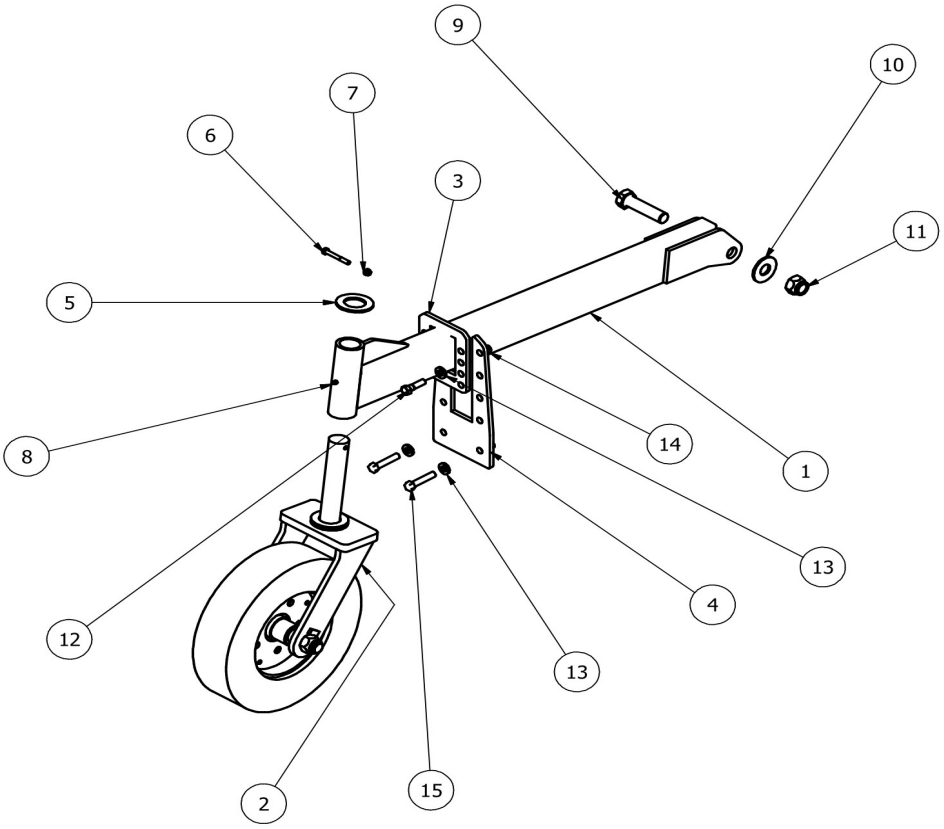

Ref. No.	Part No.	Description	Qty
1	6781	Axle Arm	1
2	3176	Tailwheel Assembly	1
3	6783	Adjustment Collar	1
4	6782	Adjustment Base	1
5	3230	Washer	2
6	5167	Bolt	1
7	2513	Nut	1
8	5033	Grease Zerk	1
9	2303	Bolt	1
10	3259	Washer	1
11	2105	Nut	1
12	2335	Bolt	2
13	2337	Washer	2
14	2336	Nut	2

3176 Complete Tail Wheel Assembly

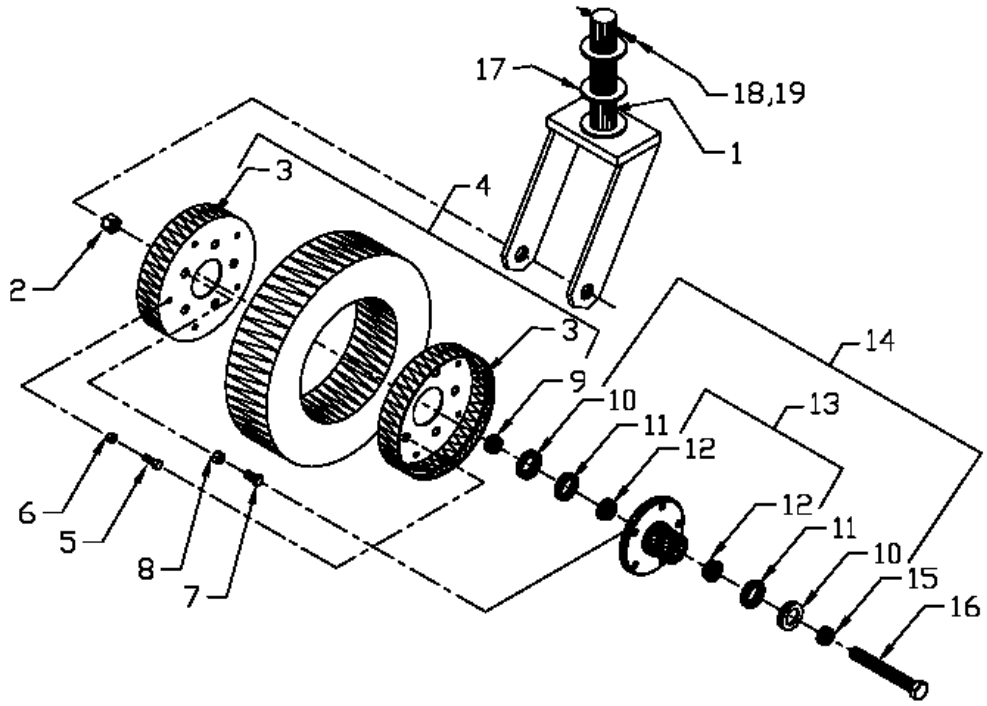

Ref. No.	Part No.	Description	Qty
	3176	Complete Tail Wheel Assembly	1
1	3177	Tail Wheel Fork	1
2	2105	Nut	1
3	3179	Wheel Only, 2 piece	1
4	3180	Tire and Wheel—less Hub	1
5	3181	Bolt	5
6	3182	Nut	5
7	3183	Bolt	5
8	3184	Nut	5
9	3185	Spacer	1
10	3186	Seal	2
11	3187	Bearing Cone	2
12	3188	Bearing Cup	2
13	3189	Hub with Races and Studs	1
14	3190	Hub Complete with Bearings and Seals	REF
15	3191	Spacer	1
16	3192	Axle Bolt	1
17	3230	Washer	2
18	2513	Nut	1
19	5167	Bolt	1
10,11, 12	4884	Bearing kit	1

Skid Shoe Assembly

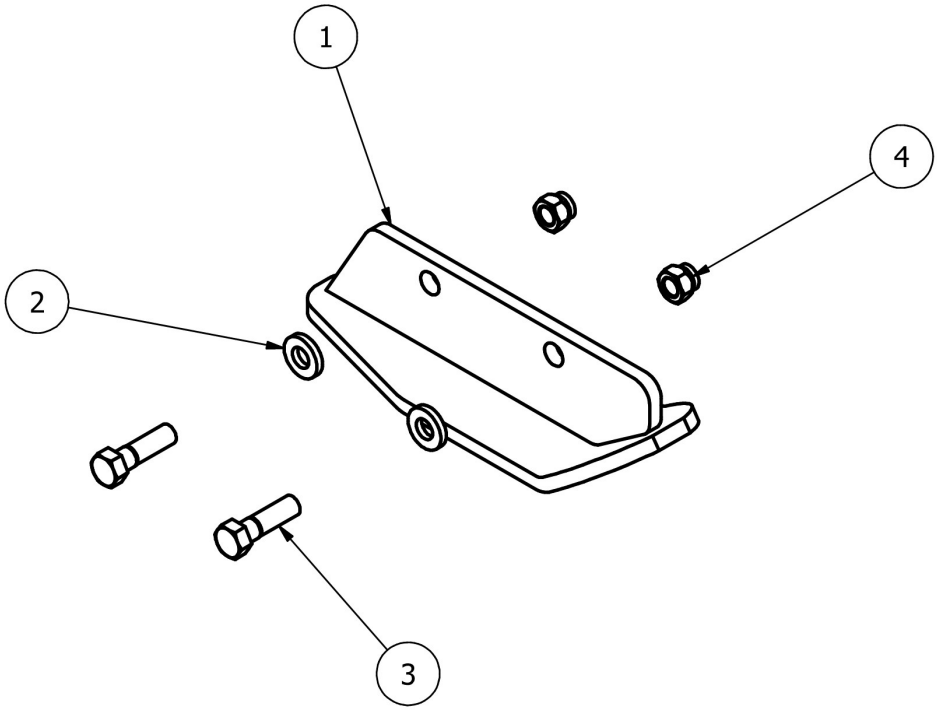

Ref. No.	Part No.	Description	Qty
1	6643	Skid Shoe	1
2	2335	Bolt	2
3	2337	Washer	2
4	2336	Nut	2

Gearbox Shield Assembly

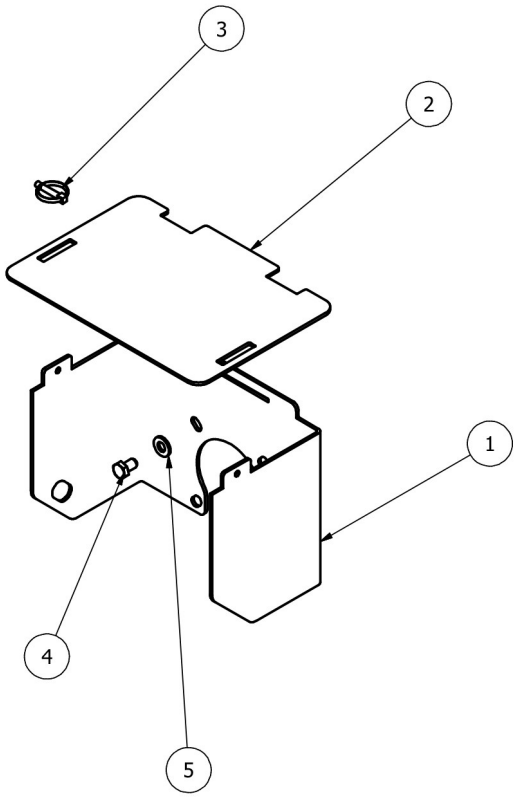

Ref. No.	Part No.	Description	Qty
1	6909	Shield Face Plate	1
2	6910	Flip Top Shield	1
3	6284	Lynch Pin	4
4	3006	Bolt	4
5	3415	Washer	2

Side Drive Shield Assembly

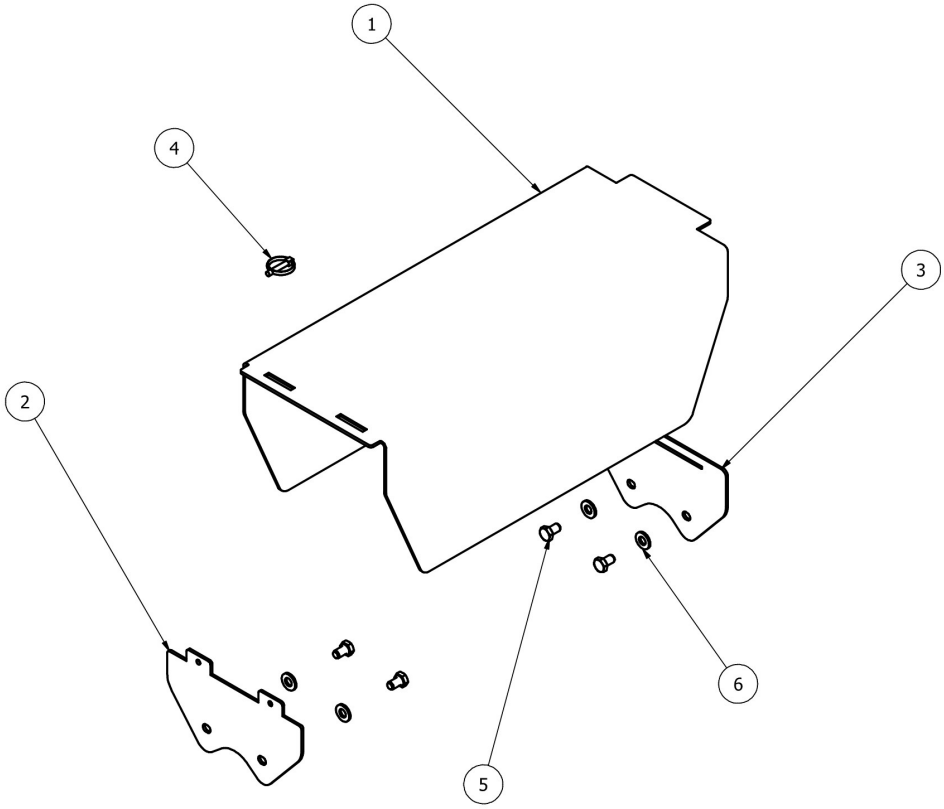

Ref. No.	Part No.	Description	Qty
1	6908	Coupler Guard Top	2
2	6831	Gearbox Face Plate	2
3	6830	Divider Box Face Plate	2
4	6284	Lynch Pin	4
5	3006	Bolt	8
6	3415	Washer	8

Chain Guards Assemblies

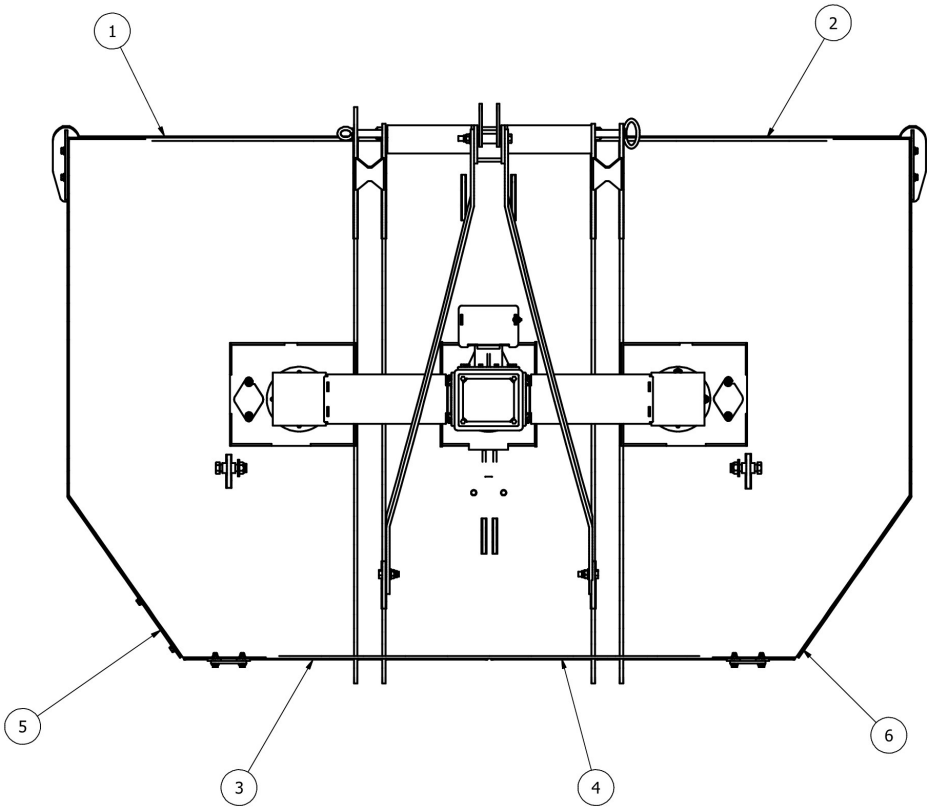

Ref. No.	Part No.	Plate Number	Plate Qty	Rod Number	Bolt Qty	Washer Qty	Nut Qty	5-Link Chain Qty
1	6875L	6868	1	6872	5	5	5	52
2	6875R	6868	1	6872	5	5	5	52
3	6873L	6866	1	6869	4	4	4	38
4	6873R	6866	1	6869	4	4	4	38
5	6874L	6867	1	6871	2	2	2	11
6	6874R	6867	1	6871	2	2	2	11

Optional Equipment and Other Items not Illustrated

HD-121 Pull Type
Assembly Breakdown

Ref. No.	Description	Page Number
1	Front Outer Right Chain Guard Assembly P	36-37
2	Front Inner Chain Guard Assembly	36-37
3	Tongue, Swivel Assemblies & Jack	41
4	Main Drive Shaft	44,45
5	Pillow Block B earing Mounting Assembly	42
6	Gear Box	22,23
7	Rear Side Left & Right Chain Guard Assembly6	36-37
8	Rear Inner Chain Guard Assembly	36-37
9	Cylinder Mounting Block	30
10	Lift Cylinder	50
11	Pivot	48
12	Gear Box Shield Assembly	34
13	Side Drive Shaft	28
14	Side Drive Shield Assembly	35
15	Transfer Box	24,25
16	Jack Shaft	46,47
17	Level Rod Assembly	43
18	Rear Outer Chain Guards Assemblies	36-37
19	Shoe Assembly	33

Tongue Assembly

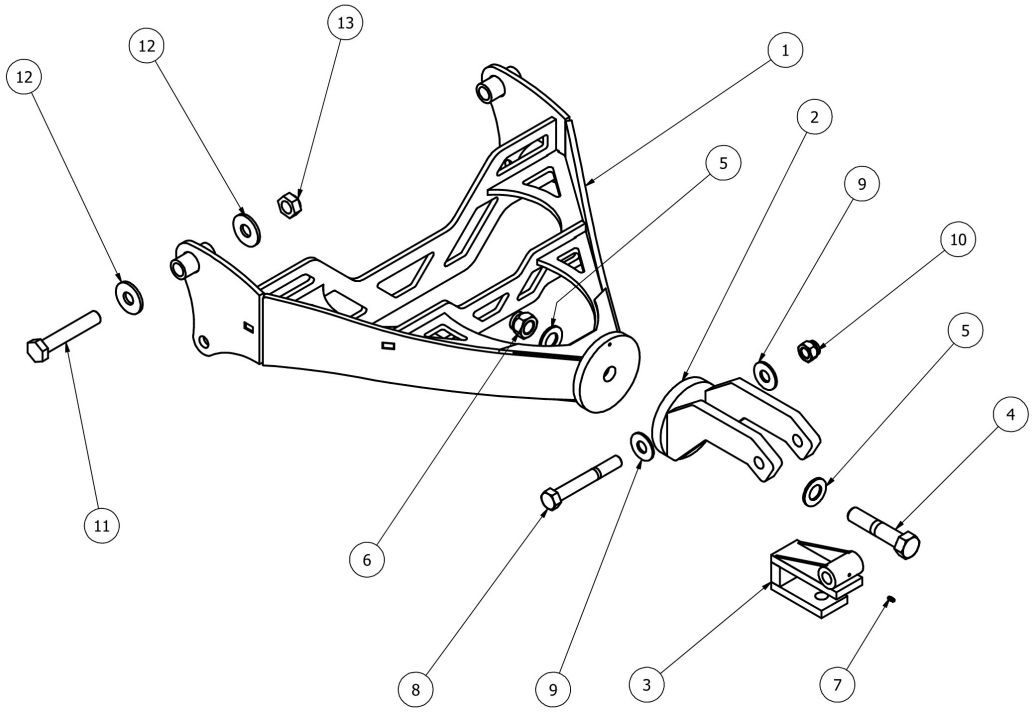

Ref. No.	Part No.	Description	Qty
1	6791	Tongue	1
2	4866	Swivel	1
3	4865	Clevis	1
4	5165	Bolt	1
5	3449	Washer	2
6	2532	Nut	1
7	5033	Grease Zerk	2
8	2626	Bolt	1
9	3259	Washer	2
10	2638	Nut	1
11	6876	Bolt	2
12	6877	Washer	4
13	6878	Nut	2

Pillow Block Bearing Mounting Assembly

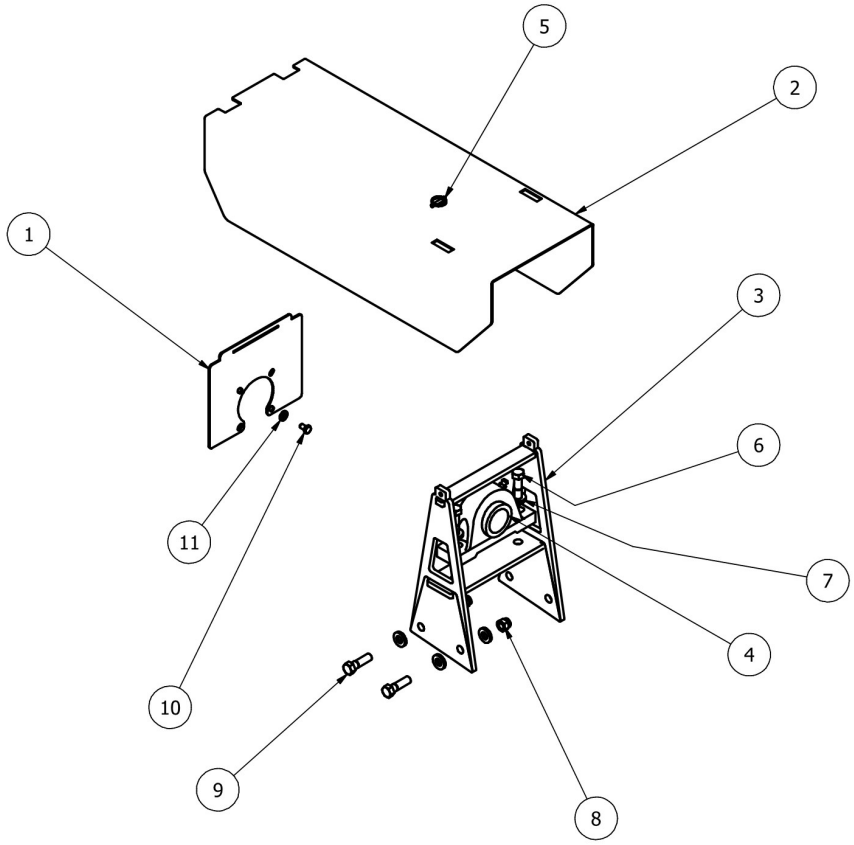

Ref. No.	Part No.	Description	Qty
1	6911	Divider Box Face Plate	1
2	6912	Driveline Guard	1
3	6779	Pillow Block Bearing Mount	1
4	3565	Pillow Block Bearing	1
5	6284	Lynch Pin	2
6	4353	Bolt	2
7	2337	Washer	12
8	2336	Nut	6
9	2335	Bolt	4
10	3006	Bolt	4
11	3415	Washer	4

5452 Main Constant Velocity Drive Shaft for Pull Type

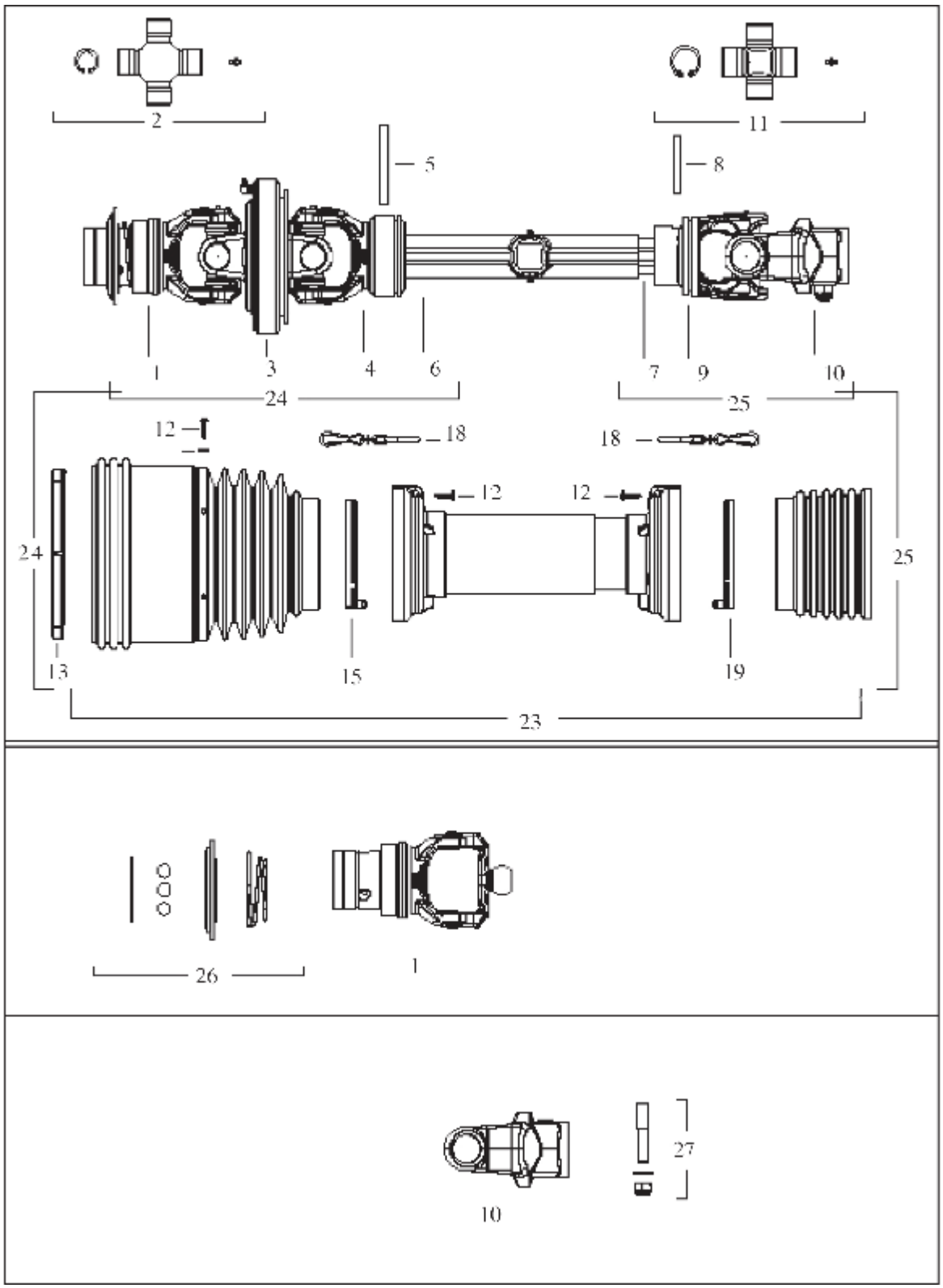

5452 Main Drive Shaft for Pull Type
Parts List

Ref. No.	Part No.	Description	Qty
1	4973	Slide Collar CV Yoke (1-3/8”)	1
2	4918	CV Cross Kit	1
3	4919	CV Body	1
4	4920	Outer Tube Yoke	1
5	4921	Outer Roll Pin	1
6	5479	Outer Tube (Steel)	1
7	5480	Inner Tube (Steel)	1
8	4924	Inner Roll Pin	1
9	3923	Inner Yoke	1
10	4945	Yoke (1-3/4”, Z=20)	1
11	4926	Cross Kit	1
12	3928	Shield Screw	12
13	4927	Shield Support	1
15	4904	Shield Flange	1
18	3931	Shield Safety Chain	2
19	3932	Inner Shield Ring	1
23	5487	Complete Shield Assembly	1
24	5481	CV Half Shaft Complete	1
25	5482	Inner Half Shaft Complete	1
26	5821	Slide Collar Kit	1
27	5822	QD Pin Kit	1

5009 Jackshaft for Pull Type

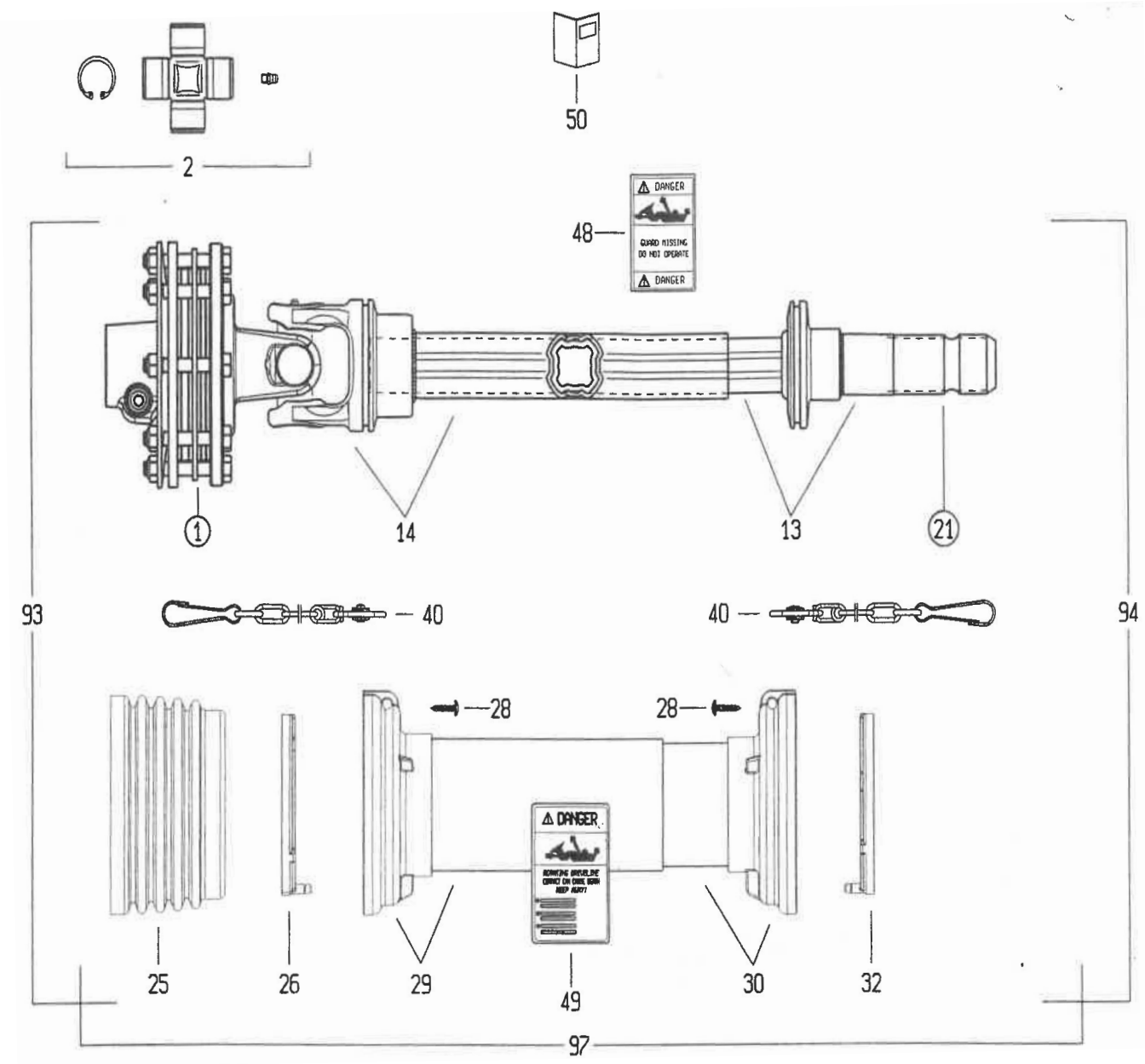

5009 Jackshaft for Pull Type
Parts List

Ref. No.	Part No.	Description	Qty
1	5096	Complete Slip Clutch	1
2	3941	Cross Kit	2
13	5011	Tube & Yoke	1
14	5010	Clutch Half Less Shield	1
21	5011	Stub Half Less Shield	1
25	5085	Shield Cone	1
26	4904	Outer Shield Support	1
28	5050	Self Tapping Screw	6
29	5012	Outer Shield Tube	1
30	5013	Inner Shield Tube	1
32	4909	Inner Shield Support	1
40	5088	Chain Assembly	2
93	5015	Clutch Half Shaft Assembly	1
94	5016	Stub Half Shaft Assembly	1
97	5014	Complete Shield Kit	1

Level Rod Assembly

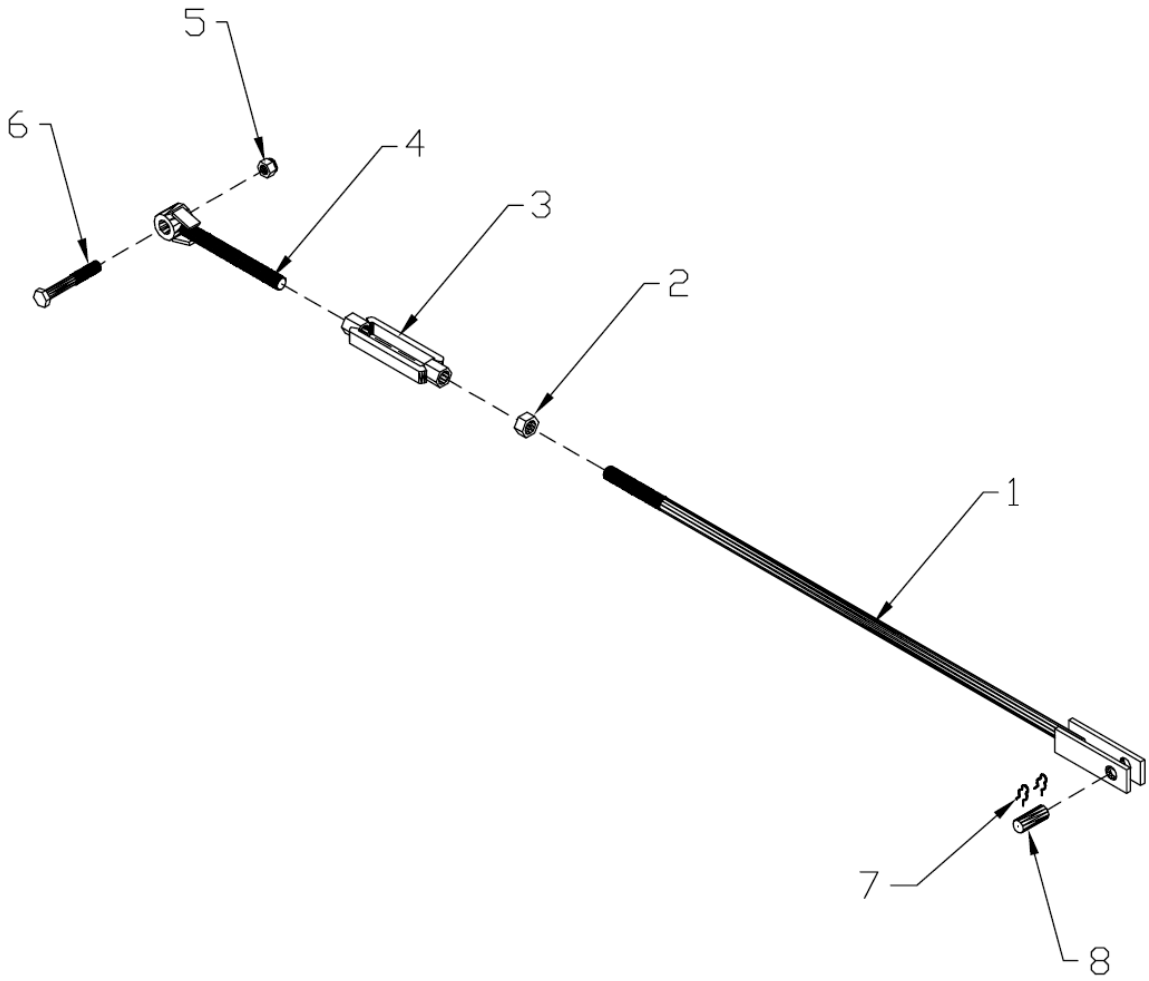

Ref. No.	Part No.	Description	Qty
1	6792	Front Level Rod	1
2	2322	Nut	1
3	2321	Turnbuckle	1
4	2320	Rear Level Rod	1
5	2638	Nut	1
6	3389	Bolt	1
7	2313	Cotter Pin	2
8	2315	Pin	1

Rear Pivot Assembly for Pull Type

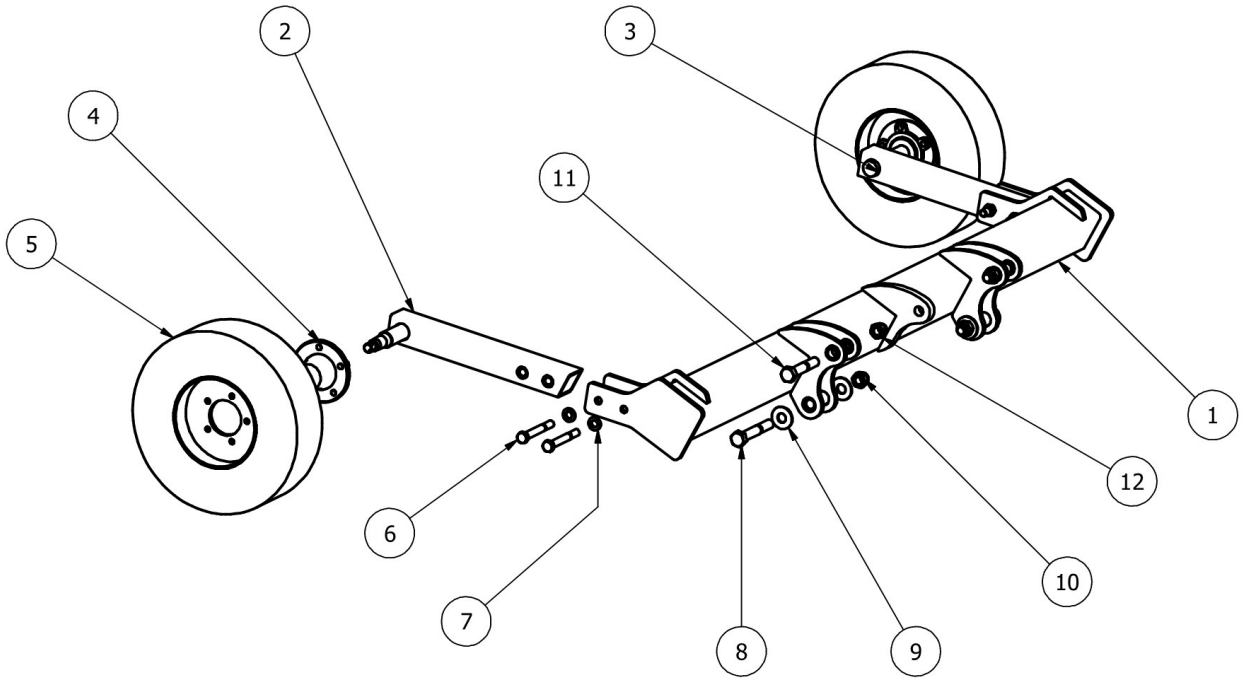

Ref. No.	Part No.	Description	Qty
1	6786	Pivot	1
2	6787R	Right Axle Arm	1
3	6787L	Left Axle Arm	1
4	2448	Hub	2
5	2484	Wheel and Tire Combo	2
6	5794	Bolt	4
7	3285	Washer	4
8	2624	Bolt	2
9	3259	Washer	4
10	2638	Nut	2
11	3389	Bolt	2
12	2638	Nut	2

2448 Hub Assembly

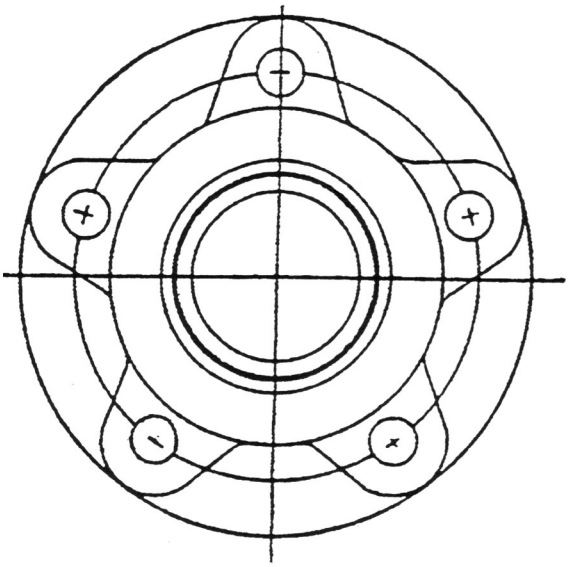

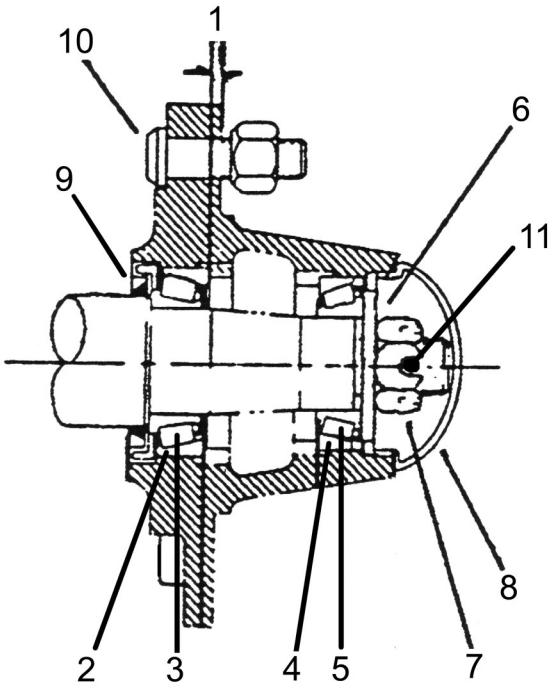

Ref. No.	Part No.	Description	Qty	Remarks
	2448	Complete Hub Assembly	REF	Includes items 2-5,9,10
1	2449	Hub with Cups and Studs only	1	
2	2450	Inner Race	1	
3	2451	Inner Bearing	1	
4	2452	Outer Race	1	
5	2453	Outer Bearing	1	
6	3359	Spindle Washer	1	
7	3372	Spindle Nut	1	
8	2456	Dust Cap	1	
9	2457	Seal	1	
10	2458	Stud Bolt with Nut	5	
11	3360	Cotter Pin	1	

2649 Lift Cylinder

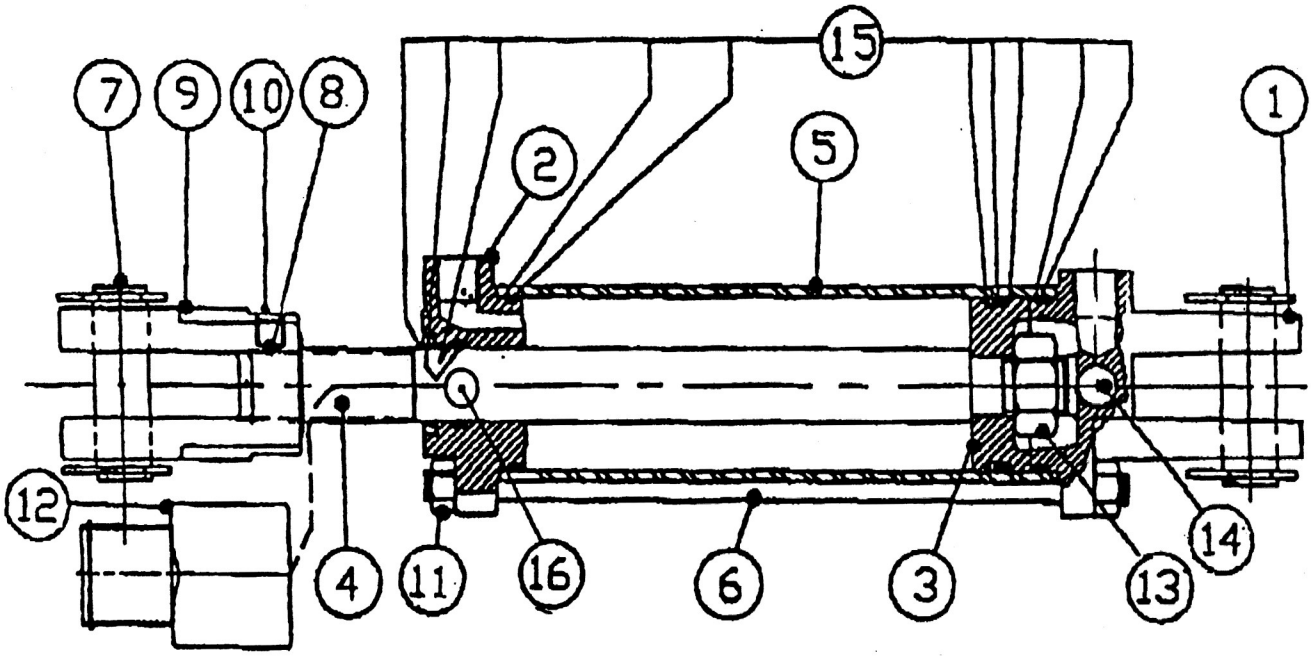

Ref. No.	Part No.	Description	Qty
1	2650	Clevis Cap	1
2	2651	Rod Cap	1
3	2652	Piston	1
4	2653	Rod	1
5	2654	Tube	1
6	2655	Tie Rod	4
7	2330	Pin	2
8	2656	Third Lock	1
9	2657	Rod Clevis	1
10	2658	Set Screw	1
11	2659	Nut	8
12	2374	Stroke Control Kit	1
13	2660	Piston Nut	1
14	2466	Vent Plug	1
15	2661	Seal Kit	1
16	2465	Restrictor	1
NOT SHOWN	5641	Hydraulic Hose	

Rocker Arm Assembly

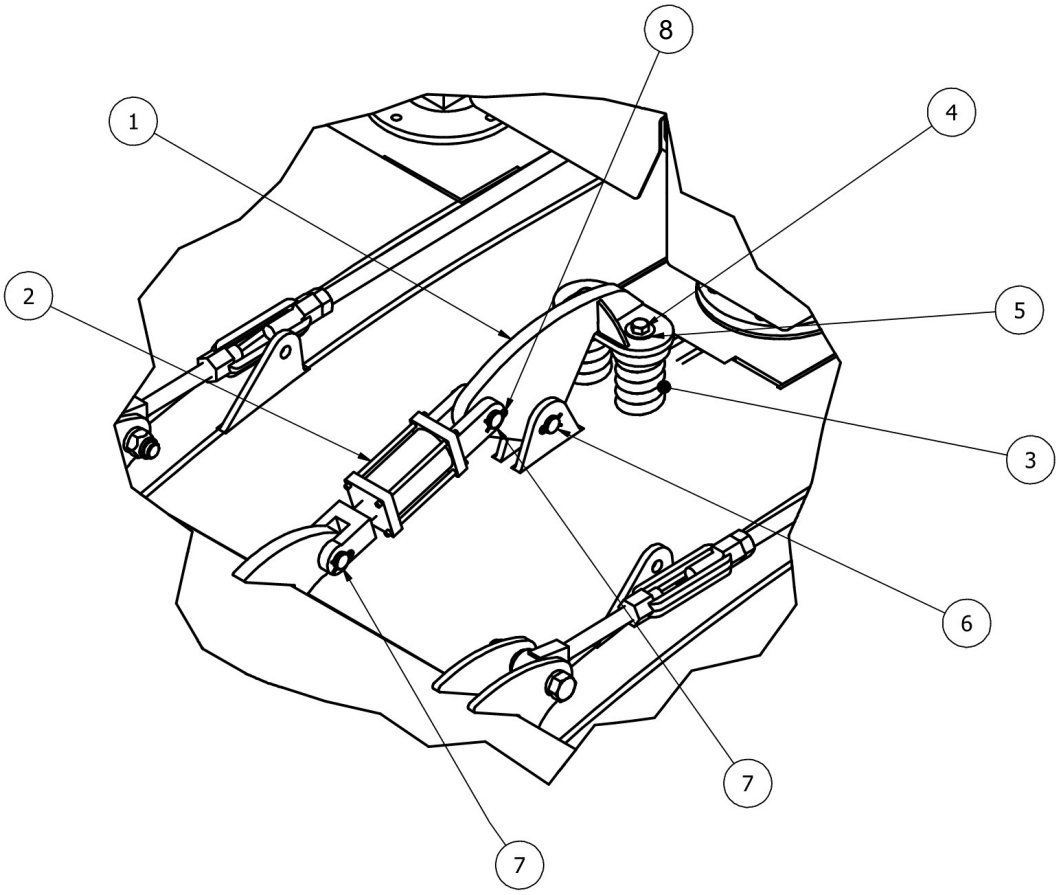

Ref. No.	Part No.	Description	Qty
1	6788	Rocker Arm	1
2	2649	Cylinder	1
3	3454	Spring	2
4	3661	Bolt	2
5	3718	Washer	4
6	2330	Pin	1
7	5721	Pin	2
8	3270	Hairpin	6

Items not Illustrated
For Pull Type Only

Part No.	Description	Qty
2484	Standard Solid Rubber Tire and Wheel	REF
2489	Rim for 2490 Tire	REF
2490	26” Aircraft Type Tire Assembly and Wheel	REF
2622	Foam Filled Tire, Implement and Wheel	REF
3275	26” Aircraft Tire Only	REF
3276	Tube for 26” Aircraft Tire	REF
3516	Foam Filled Aircraft Tire Assembly	REF
2965-17	Access Cover	2
3277	28” Aircraft Tire Only	REF
3278	Tube For 28” Aircraft Tire	REF

HALL MANUFACTURING WARRANTY POLICY FOR BUSH-WHACKER ROTARY MOWERS

NEW EQUIPMENT WARRANTY

Subject to limitations and exclusions set forth herein, Hall Manufacturing Inc. warrants that if any component or part of a machine manufactured by Hall Manufacturing, excluding any mechanical gearbox or mechanical gearbox component used by Hall Manufacturing, proves to be defective in material or workmanship within one (1) year from the delivery date of the original sale to the end user, Hall Manufacturing will, at its option, either repair or replace the defective part without charge. In addition, Hall Manufacturing warrants that if any mechanical gearbox or mechanical gearbox component used by Hall Manufacturing on any Bush-Whacker rotary mower proves to be defective in material or workmanship within three (3) years from the delivery date of the original sale, Hall Manufacturing will, at its option, either repair or replace the defective mechanical gearbox or gearbox part without charge, except for rotary mowers sold directly to a state or related governmental agencies for which the mechanical gearbox or mechanical gearbox component warranty period is limited to one (1) year from the delivery date of the original sale. No payment will be made in lieu of repair of the machine.

LIMITATIONS AND EXCLUSIONS

If the equipment is used for rental the warranty period is ninety (90) days from the date of sale to the renter. This includes all mechanical gearboxes and their components.

This limited warranty covers defects in materials and workmanship in the parts manufactured or used by Hall Manufacturing excluding:

Damage resulting from accident, abuse, misuse, neglect or other than normal and ordinary use of the equipment.

Damage resulting from failure to use the product in accordance with the manufacturer's instructions. Refer to the appropriate owner's manual for the Bush-Whacker mower model you purchased.

Hall Manufacturing shall be released from all obligations and liabilities under this warranty if:

The equipment had been operated with any accessory, equipment, component or part not manufactured by Hall Manufacturing or approved for use by Hall Manufacturing.

The equipment has been repaired, altered or modified without Hall Manufacturing's approval or if the equipment shall have been operated subsequent to its involvement in an accident or breakdown unless the Owner furnishes reasonable evidence that such repair, alteration, modification or operation subsequent to its involvement in an accident or breakdown was not a cause of the defect.

The Owner does not return, at Owner expense, the defective accessory, equipment component or machine to, or notify, an authorized Bush-Whacker dealer. The Owner shall be responsible for submission of reasonable evidence of proof of Date Discovery of said defect.

REPLACEMENT PARTS WARRANTY AND PARTS REPLACED BY WARRANTY

Hall Manufacturing further warrants that if any genuine Bush-Whacker part or component utilized by an authorized Bush-Whacker dealer proves to be defective in material or workmanship, within thirty (30) days of such utilization, Hall Manufacturing will, at its option, repair or replace the defective part without charge. Owner shall be responsible for all freight charges including labor to and from the place where the warranty work is performed.

WHAT YOU MUST DO TO ENFORCE THIS WARRANTY

Warranty services must be performed or approved by an authorized Bush-Whacker Dealer. The Owner must, at the Owner's expense, deliver, mail or ship the defective product together with the original Bill of Sale to any Authorized Dealer in the Owner's area.

Owner must pay any postage, shipping charges, insurance costs, freight and other expenses to and from the place where the warranty work is performed. If required to return equipment or any component or part to an authorized Bush-Whacker Dealer, Owner shall be obligated to pay any premium payable for overtime labor if overtime is incurred as a result or a request by the Owner.

UNAPPROVED SERVICE OR MODIFICATION

All obligations of Hall Manufacturing under this warranty shall be terminated if:

Service is performed by someone other than a Dealer authorized by Hall Manufacturing

Equipment is modified or altered in ways not approved by Hall Manufacturing.

ACCIDENTS AND NORMAL MAINTENANCE

This warranty covers only defective materials and workmanship. It does not cover depreciation or damage caused by normal wear, accident, improper maintenance, improper protection in storage or improper use. The cost of normal maintenance and replacement of service items such as: cutting parts, drive line cross kits and clutch pads, skid shoes, gearbox and drive line shields, tires, bearings, seals, chains, etc. shall be paid for by the Owner.

DISCLAIMER OF IMPLIED WARRANTIES & CONSEQUENTIAL DAMAGES

Hall Manufacturing's obligation under this limited warranty, to the extent allowed by law, is in lieu of all warranties, Implied or expressed, **INCLUDING IMPLIED WARRANTIES OF MERCHANTABILITY AND FITNESS FOR A PARTICULAR PURPOSE** and any liability for incidental and consequential damages with respect to the sale or use of the equipment warranted. Such incidental and consequential damages shall include but not limited to: transportation charges loss of income; rental of substitute equipment, and expenses due to loss, damage, detention or delay in the delivery of equipment or parts resulting from acts beyond the control of Hall Manufacturing.

IMPROVEMENTS OR CHANGES

Hall Manufacturing reserves the right to make improvements of changes in design and specification at any time without incurring any obligation to owners of units previously sold.

WARRANTY CLAIMS PROCEDURE

Warranty claims must be delivered to Hall Manufacturing within thirty (30) days after the warranty service work was performed.

Hall Manufacturing will approved or deny claim within thirty (30) days of receiving a claim.

Hall Manufacturing will issue credit for all genuine Bush-Whacker parts or components as well as all approved Dealership employee labor time at a rate of $30.00 per hour within thirty (30) days of the claim approval.

Defective parts must be held for inspection for ninety (90) days after the work is performed. Hall Manufacturing may request that parts be returned to the Hall Manufacturing factory for inspection.

ACKNOWLEDGEMENT REQUIRED

Hall Manufacturing shall have no obligation under this warranty unless the Owner Registration Card, included with your Operators Manual, is signed by Owner and Dealer or Dealer's Agent and is delivered along with a copy of the original Bill of Sale from the Dealer to Hall Manufacturing within sixty (60) days from the date of sale.

COMPLETE THE WARRANTY REGISTRATION CARD

(ON THE FOLLOWING PAGE)

PLACE IN AN ENVELOPE ALONG WITH THE ORIGINAL BILL OF SALE

MAIL TO:

HALL MANUFACTURING, INC.
P. O. BOX 5638
NORTH LITTLE ROCK, AR 72119

WARRANTY REGISTRATION

** Return to Hall Manufacturing within sixty (60) days of purchase

Date of Purchase _____ Purchaser _____

Address _____ City_____ State _____

Product _____ Model#_____ Serial#_____

Dealer_____
Address_____
City_____ State_____

_____ _____
Signature of Original Buyer Signature of Dealer or Dealer's Agent

* Please include a copy of the original bill of sale